Assembly Instructions

Important

Before you begin, read and comply with all safety and operating instructions, and ensure all parts and correct quantities are included.

Any parts damaged during shipment must be reported within 5 days of receipt. To report information regarding missing parts or damage, to purchase parts or accessories, or if you have any questions, please contact us.

www.spectrumfurniture.com
800-235-1262, 715-723-6750

Thank you for purchasing Spectrum products!

Note: The table should be fully-assembled in it's final location before proceeding with this installation.

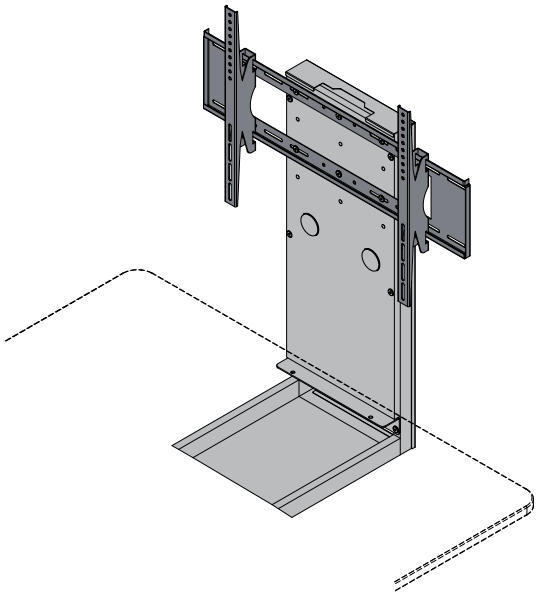

Display Stand for InVision Access Table 37120

(2) 0115728
Frame

(1) 0111266
Monitor mount

(1) 0115733
Angle bracket

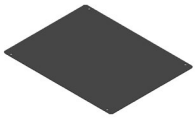

(1) 0115732
Bottom panel

Tools Required

4mm Hex wrench (included)

(1) 0115731
Rear panel

(1) 0115727
Front panel

(16) 052605
1/4-20 x 15mm
JC bolt

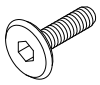

(4) 059534
1/4-20 x 30mm
JC bolt

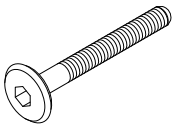

(6) 0102063
1/4-20 x 35mm
JC bolt

(1) 025039
4mm Hex wrench

(6) 026059
1/4" Washer

(6) 041943
1/4-20 Locknut

(2) 039622
2" Round grommet

1. Attach frames to table

1. Remove the side panels.
2. From under the worksurface, check to see if the table has the 2 tube end caps installed-these should be removed.
3. Slide each frame into a tube as shown while aligning the mounting holes. **Figure 1**.
4. Install the (2) 1/4-20 x 15mm JC bolts in each frame, but do not tighten completely yet.

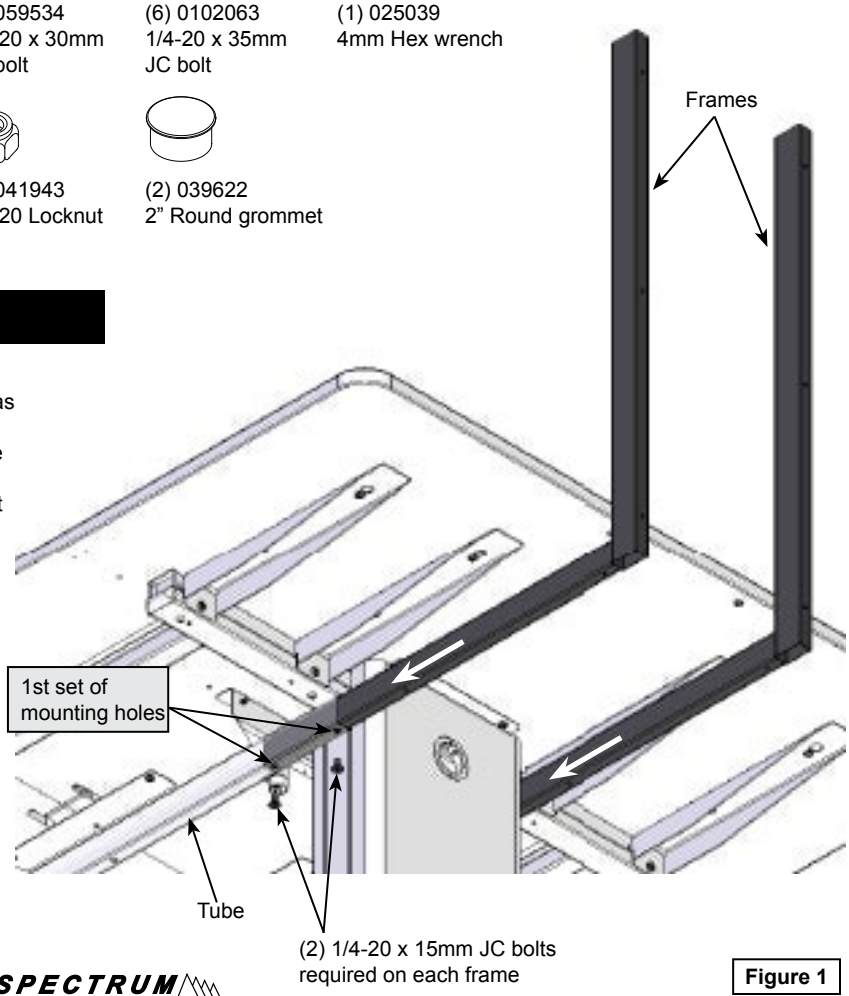

Figure 1

SPECTRUM INDUSTRIES INC.

2. Install angle bracket and bottom panel

Tools Required: 4mm hex wrench (included)

1. Attach the bottom panel to the 2 frames with (4) 1/4-20 x 15mm JC bolts. Do not tighten yet. **Figure 2**.
2. Align and attach the angle bracket to the frames and worksurface with (4) 1/4-20 x 15mm JC bolts. Do not tighten yet.

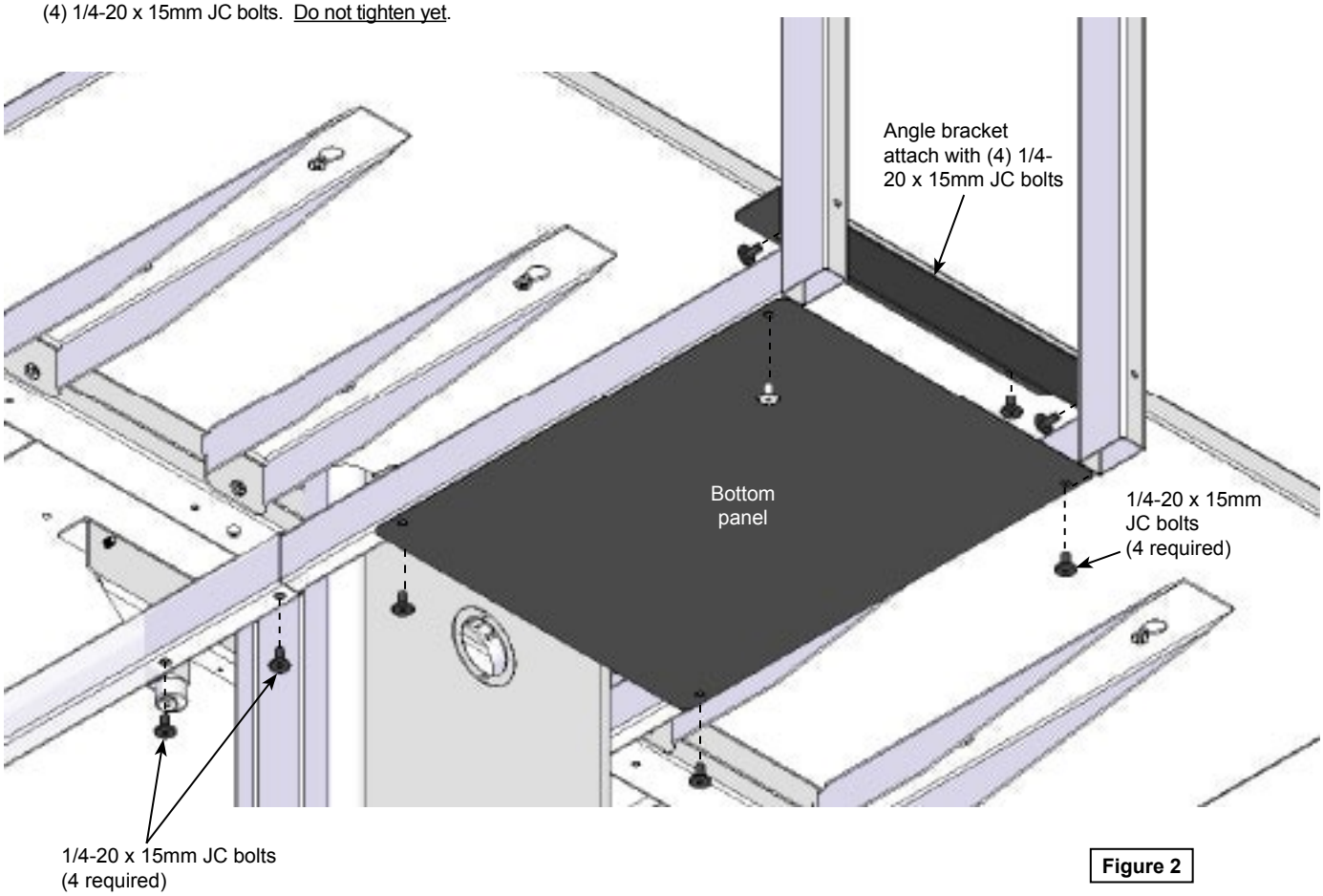

Figure 2

3. Install the front panel

Tools Required: 4mm hex wrench (included)

1. On the top side of the worksurface, attach the front (laminate) panel to the two frames with (4) 1/4-20 x 30mm JC bolts. Tighten bolts securely. **Figure 3**.
2. Install the 2" grommets into the panel.
3. Go back and securely tighten all fasteners from step 1-2.

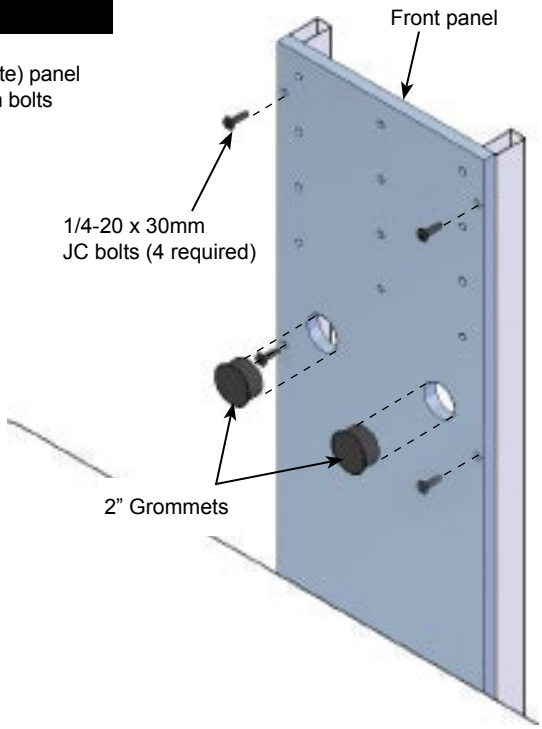

Figure 3

4. Install monitor mount plate

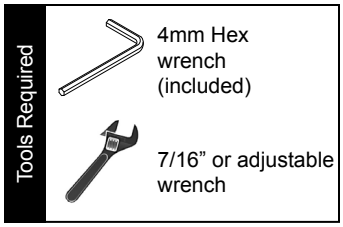

1. Two sets of mounting holes are available for the monitor mount. Choose a set of holes based on your monitor size and preferred height. **Figure 4A**. Typical installations use the upper holes for better viewing and clearance.
2. Attach the monitor mount plate to the front (laminate) panel with (6) 1/4-20 x 35mm JC bolts, 1/4” washers, and 1/4-20 locknuts. Tighten bolts equally and securely. **Figure 4B**.
3. Once installed, the monitor mount plate can tilt up to 15° up or down. **Figure 4C**.

Two-vertical positions available (dimensions shown from worksurface to center of monitor)

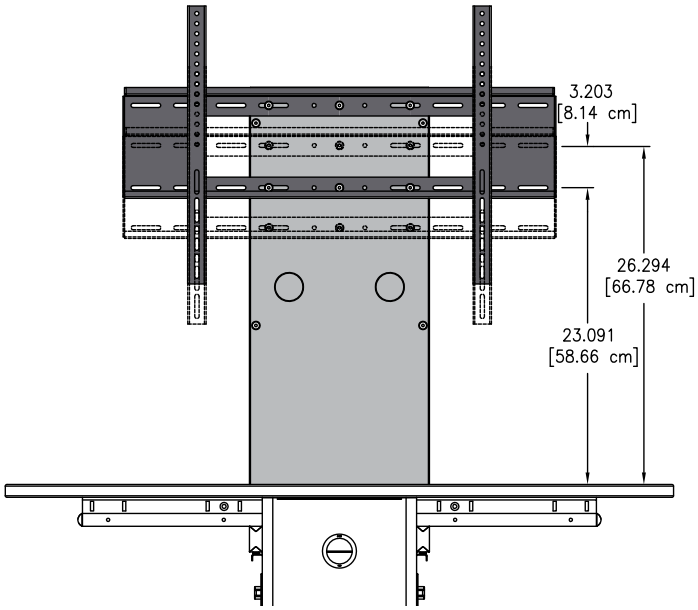

Figure 4A

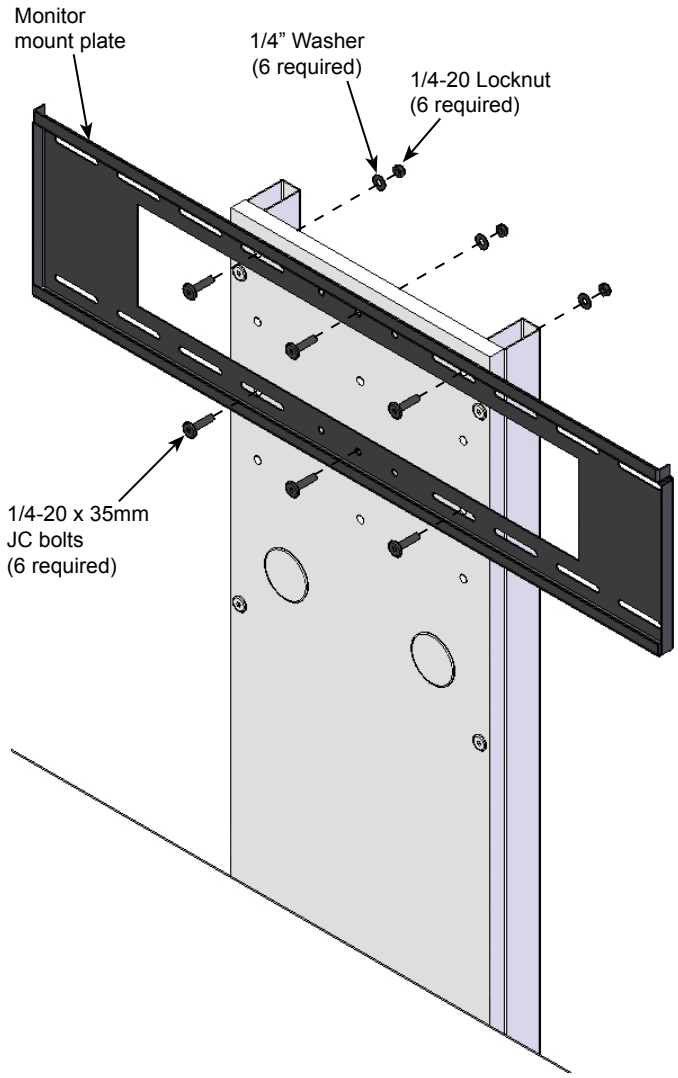

Figure 4B

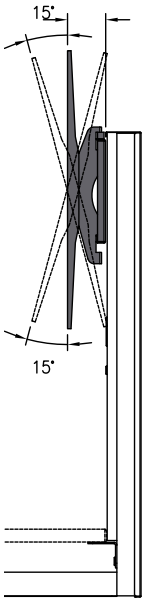

Figure 4C

5. Install monitor

- Refer to the instructions included with the monitor mount for complete monitor installation procedure.
- The assembled display stand accommodates most 37”-63” monitors.
- The chart at right shows the monitor weight capacity available when the stand is used with the additional InVision Access options shown. Be sure your monitor does not exceed this weight capacity.

⚠ WARNING ⚠

The monitor should always be lifted off the stand before moving the table.

	Added InVision Access option			Weight capacity available for installed monitor(s)
	Display Shroud 95532 -38 lbs	**Dual Display Mount** 37124 -29 lbs	**Camera Mount** 37108 -7 lbs	
InVision Access Display Stand 37120 (100 lb capacity)			✓	= 93 lbs
	✓			= 62 lbs
	✓		✓	= 55 lbs
		✓		= 71 lbs
		✓	✓	= 64 lbs
	No additional options added			= 100 lbs

**Note: The display shroud is not compatible with the dual display mount.*

6. Route monitor wiring and install back panel

Tools Required: 4mm Hex wrench (included)

1. Route cords / wires to the monitor using the wiring tray and grommets. Wire routing options are shown in **Figure 6**.
2. After all wiring has been completed, install the back panel with (4) 1/4-20 x 15mm JC bolts and tighten securely.

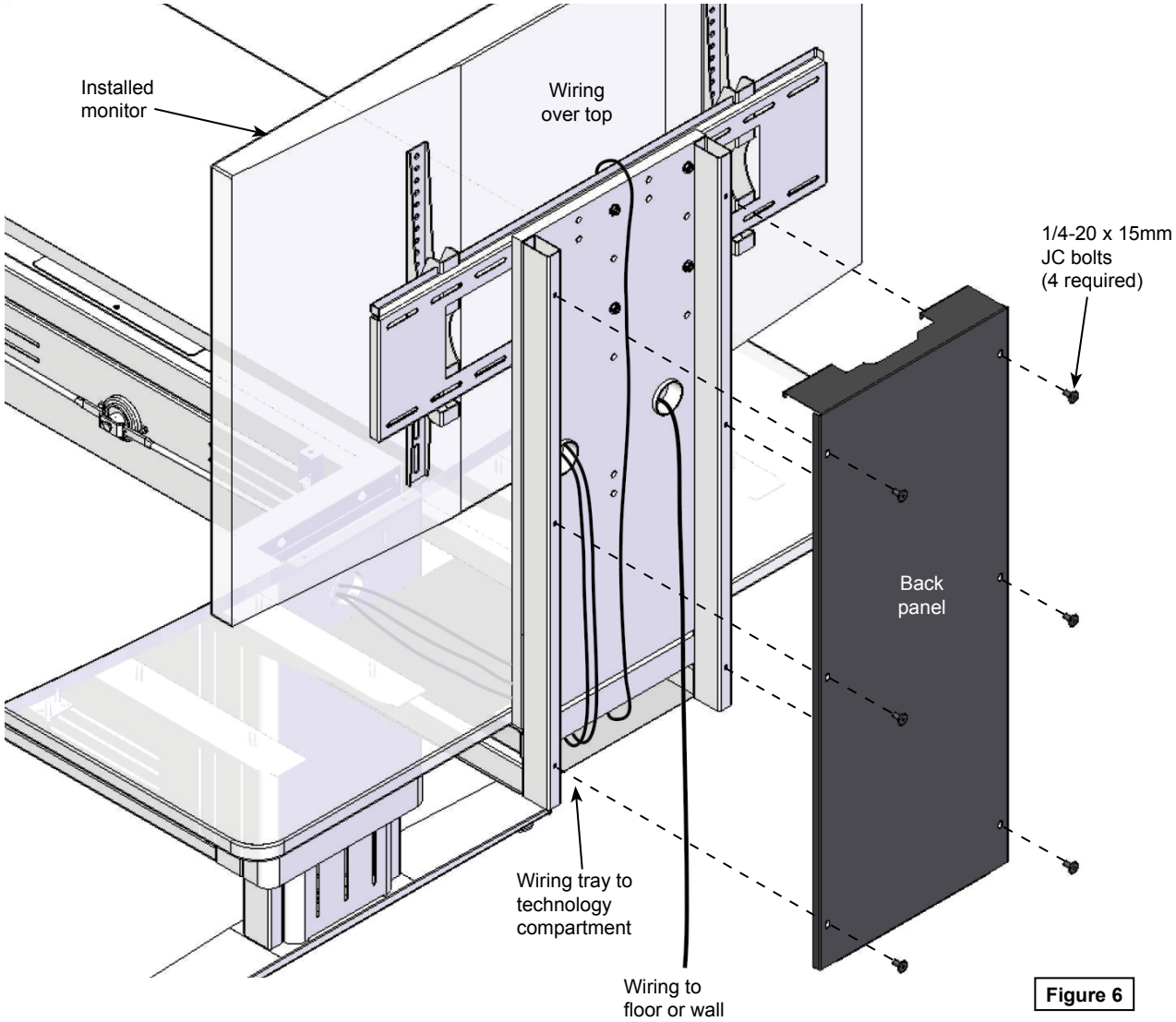

Figure 6